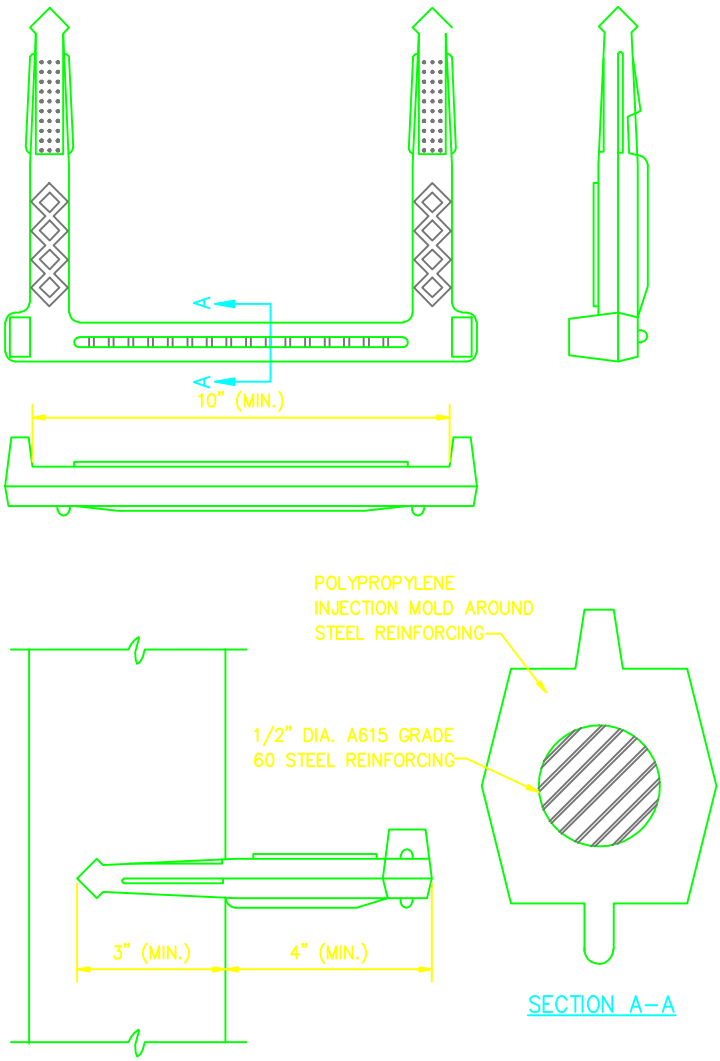

NOTES:

1) STEPS SHALL BE PLACED INTO WET CONCRETE WALL DURING MANUFACTURE OR MORTARED INTO HOLES AFTER CONCRETE HAS SET.

2) DESIGN OF STEP SHALL MEET REQUIREMENTS OF ASTM C–478, LATEST EDITION.

HUNTINGTON STORMWATER UTILITY DEVELOPMENT MANUAL

CASTING DETAILS		
REINFORCED PLASTIC MANHOLE STEP		
SCALE: NONE	DATE: JAN. 2005	DWG. NO. S – 7