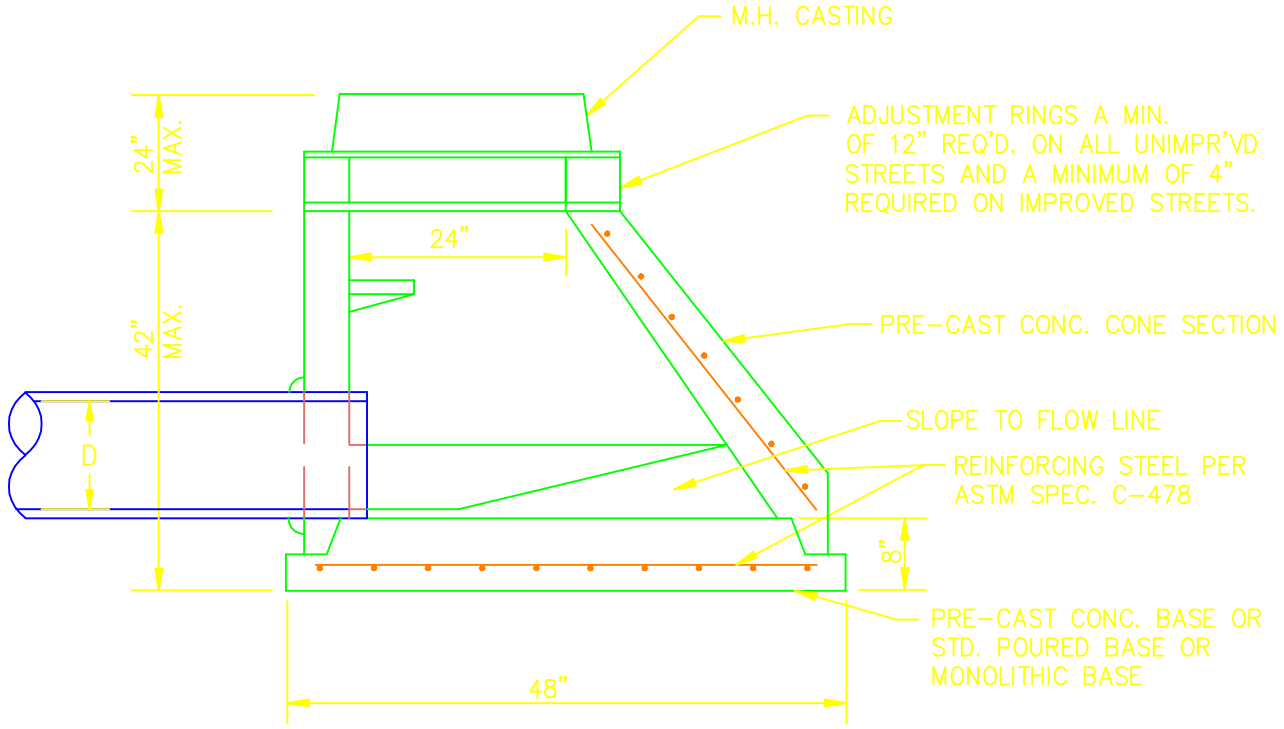

NOTE:
GENERAL CONSTRUCTION REQUIREMENTS SAME AS TYPE I MANHOLE

HUNTINGTON STORMWATER UTILITY DEVELOPMENT MANUAL

STRUCTURE DETAILS		
TYPE IV MANHOLE		
SCALE: NONE	DATE: JAN. 2005	DWG. NO. S – 3