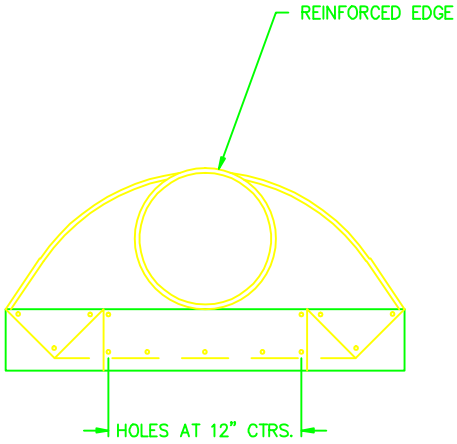

NOTE: FOR PIPE DIAMETER <30" USE 16 GAUGE GALVANIZED STEEL. FOR 30" AND LARGER USE 14 GAUGE GALVANIZED.

TYPE 1

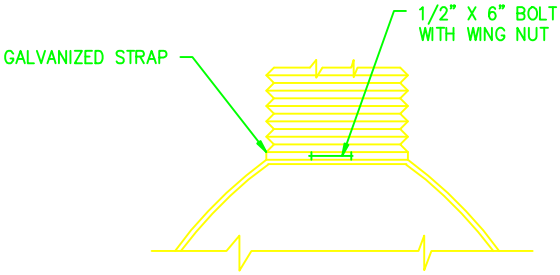

TYPE 2

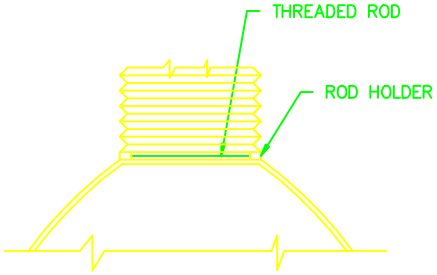

HUNTINGTON STORMWATER UTILITY DEVELOPMENT MANUAL

STORM WATER DETAILS

METAL FLARED END SECTION

SCALE: NONE	DATE: JAN. 2005	DWG. NO. M-1