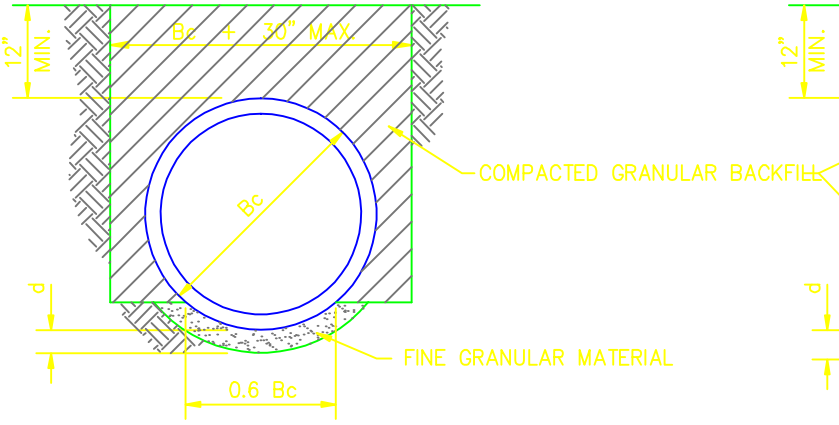

SHAPED SUBGRADE WITH GRANULAR FOUNDATION

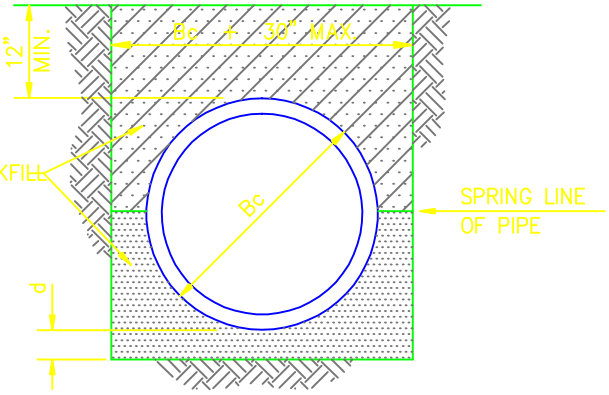

GRANULAR FOUNDATION

DEPTH OF BEDDING MATERIAL BELOW PIPE	
D	d(MIN.)
27" & SMALLER	3"
30" TO 60"	4"
66" & LARGER	6"

LEGEND

Bc = OUTSIDE DIAMETER

D = INSIDE DIAMETER

d = DEPTH OF BEDDING MATERIAL BELOW PIPE BELL

NOTE:

FOR ROCK OR OTHER NON-COMPRESSABLE MATERIAL: THE TRENCH SHOULD BE OVER-EXCAVATED A MIN. OF 6" & REFILLED WITH GRANULAR MATERIAL.

HUNTINGTON STORMWATER UTILITY DEVELOPMENT MANUAL

BEDDING & BACKFILL DETAILS

RIGID PIPE BEDDING DETAIL (CLASS "B")

SCALE: NONE	DATE: JAN. 2005	DWG. NO. BB-3